Concert Black

CONCERT BLACK 5.0 OCTAVE MARIMBA
USER MANUAL



majestic

Components

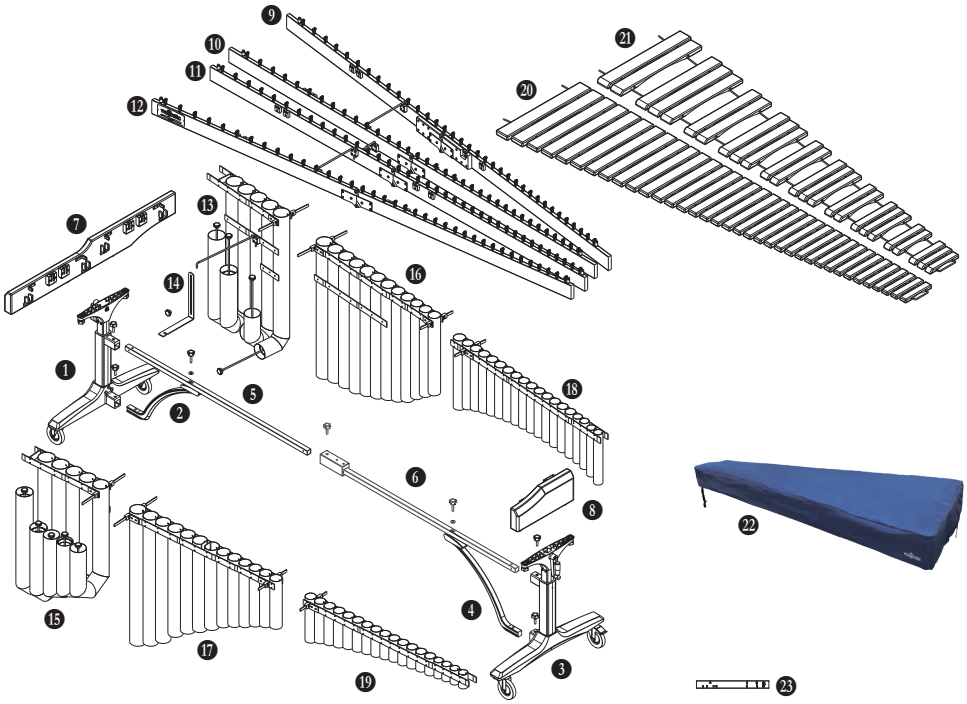

Item	Parts Description	Inner Carton
1	Leg Assembly – Bass End	1/9
2	Curved Brace	1/9
3	Leg Assembly – Treble End	2/9
4	Curved Brace	2/9
5	Cross Bar – Bass End (male)	3/9
6	Cross Bar – Treble End (female)	3/9
7	Keyboard Frame End Piece – Bass End	3/9
8	Keyboard Frame End Piece – Treble End	3/9
9	Folding Rails - #1 (audience side, with Majestic logo badge)	4/9
10	Folding Rails - #2	4/9
11	Folding Rails - #3	4/9
12	Folding Rails - #4 (player side, with *serial number* badge)	4/9
13	Resonator – Accidental Bass Section (C#2 – G#2)	6/9
14	Reinforcing Brace	6/9
15	Resonator – Natural Bass Section (C2 – G2)	5/9
16	Resonator – Accidental Middle Section (A#2 – E#4)	7/9
17	Resonator – Natural Middle Section (A2 – F4)	7/9
18	Resonator – Accidental Treble Section (F#4 – A#6)	8/9
19	Resonator – Natural Treble Section (G4 – C7)	8/9
20	Tone Bars – Natural	9/9
21	Tone Bars – Accidental	9/9
22	Protective Cover	1/9
23	Tuning Scale	1/9

1. Connect curved brace to cross bar (❷ + ❺, ❹ + ❻)
Connect curved brace to cross bar with knob. Do not tighten the knobs.

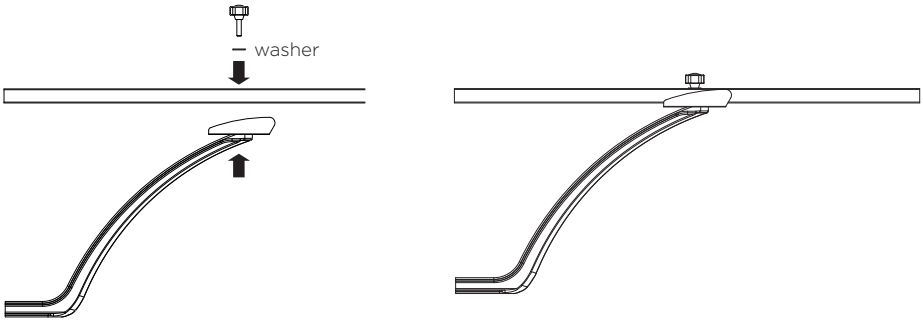

2. Assemble cross bar set to leg (❶ + ❷ ❺, ❸ + ❹ ❻)
With bass leg assembly lying flat, place end of the cross bar into position (**A**) and end of curved brace into position (**B**). Tighten knob of position (**B**) first, then the other knobs at position (**A**) and (**C**).
Repeat the process at the other end.

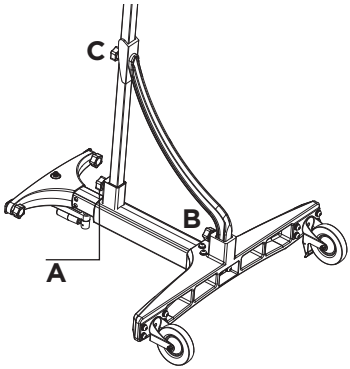

3. Setup leg assembly (❶ ❷ ❺ + ❸ ❹ ❻)
Set both leg assembly upright, bring cross bar section together and secure with knob.

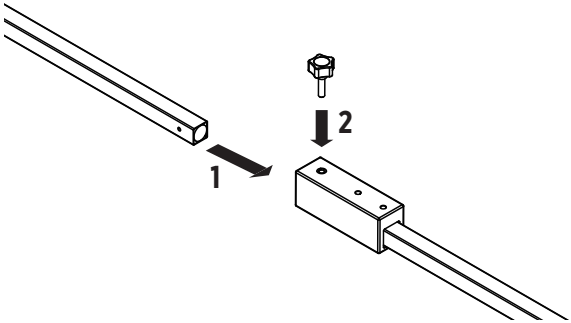

⚠ *Make sure both sides of legs are at the same height, before connecting cross bar.*
⚠ *Engage brakes before putting Leg Assembly together to provide stability and traction. Wheels with brake should be positioned facing audience side.*

Frame Assembly

1. Assemble keyboard frame end piece (❼ + ❶, ❽ + ❸)
Place keyboard frame bass end piece onto top of bass end leg, and secure with knobs.
Repeat the step at treble end piece.

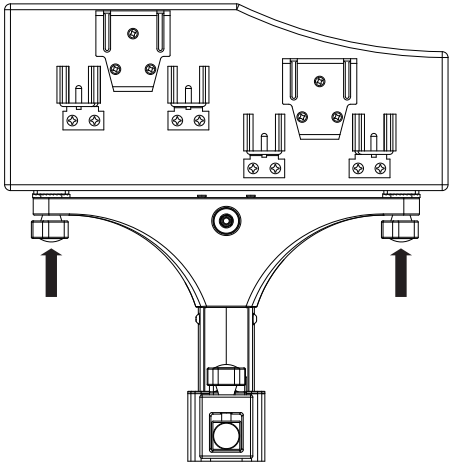

2. Assemble rail (❾, ❿, ⓫, ⓬)
Attach **No. 2** (❿) and **No. 3** (⓫) rails between keyboard frame ends; then attach **No. 1** (❾) and **No. 4** (⓬) rails. (Rail numbers are labeled on bass end of rails.)
Lock the reinforcing rod between rail **No. 2** and **No. 3**.

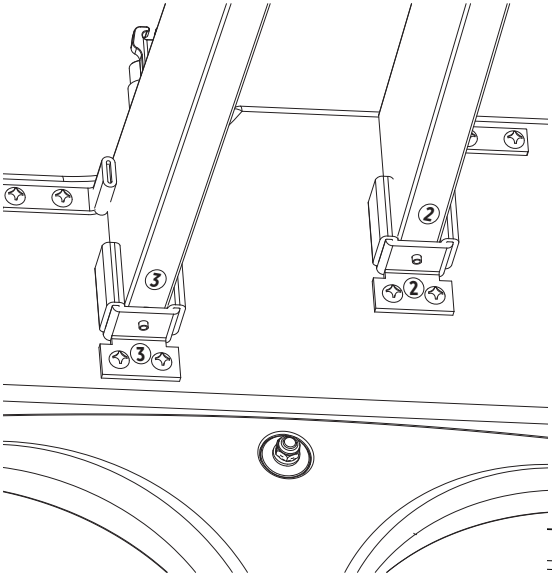

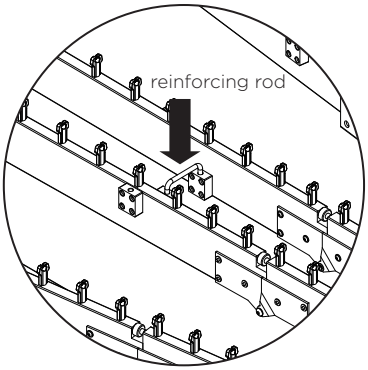

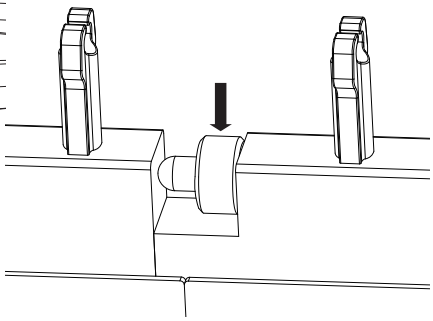

⚠ *Rail sag may be adjusted by screws located inside hinged center of folding rails, to ensure proper alignment.*

Pull the foldable arms of resonator set.
Attach resonator set by setting arms firmly into notches on rails and keyboard frame ends.
To ensure the ideal functioning of resonator tuning cap, please follow suggested order:

1. Attach accidental bass section resonator (⓭).
   Hang the resonator set in place.
   Remove the pre-installed knobs on the resonator set (**D**), and curved brace (**C**).
   Slide the L-shaped reinforcing brace (⓮) in place.
   Tighten both (**C**) and (**D**) knobs.
2. Attach natural bass section resonator (⓯).
   Lock the long resonator reinforcing rod (★) between ⓭ & ⓯.
3. Attach rest of the resonator sets (⓰ - ⓳).
4. After all resonator sets are in place, lock rest of the resonator reinforcing rods.
5. Height adjustment – operate the handle on side of leg assembly to raise or lower as needed.
   Adjust one end at a time, using imprinted scale as a guide. Do not adjust one side over 2" per side without adjusting the other side.

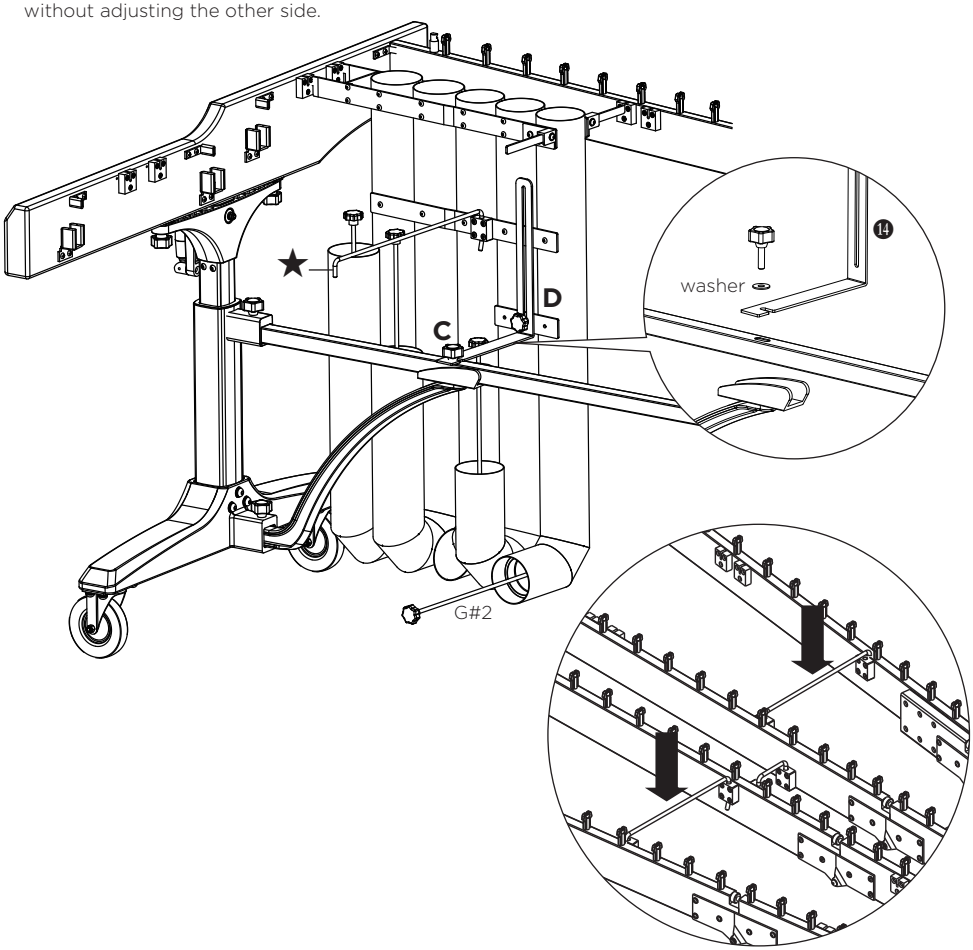

⚠ *The reinforcing brace (⓮) can stabilize the resonator set, when G#2 tuning cap is in use. We strongly suggest that users do not leave this brace out.*

⚠⚠⚠ *Loosen knob (**D**) every time when adjusting height of the instrument. Once preferred height is reached, remember to tighten the knob.*

Tone Bar Placement

1. Natural bars (⑳)
Gently lay the natural bars on rail. Bar cord should go around metal posts at treble end.

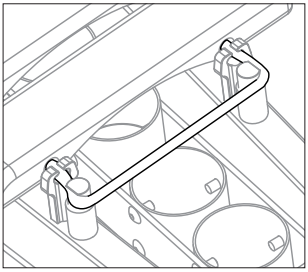

Position each tone bar between bar posts, beginning from treble (small) end, working progressively toward bass (large) end.
Once tone bars are in place, pull excessive bar cord to bass end, and bring bar cord around metal posts. Tighten cord fastener.

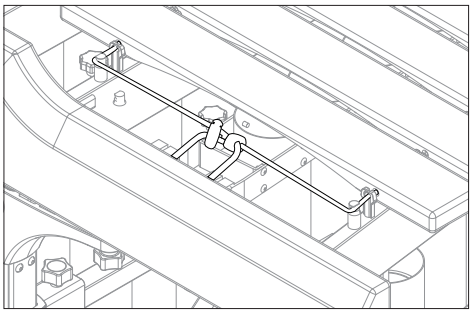

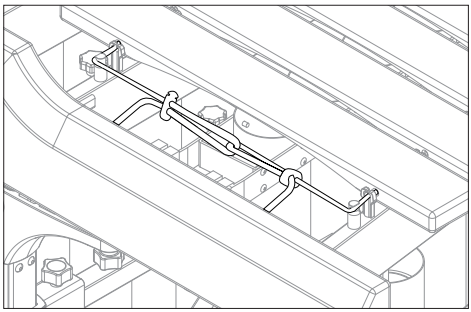

2. Accidental bars (㉑)
Repeat the same process at treble end. Place bars over capped resonators only.

⚠ *When tighten the bar cord, be sure to pull the cord taut.*

Tuning Scale Instruction

*Optimized for tuning environment temperature of 22°C / 72°F
Positioning tuning caps on notes with curved tubes:
C2. D2. E2. F2. G2. C#2. D#2. F#2. G#2

1. Insert the scale (with the Majestic logo on top) so that it sits flat on the **inner surface** of the tuning cap as shown.

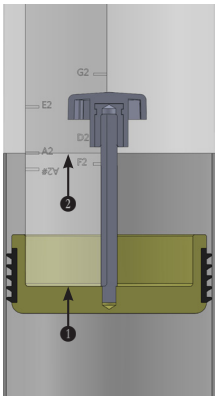

2. With scale remaining firmly against the tuning cap, use the push/pull knob to adjust the cap position so that the proper note name indicator aligns with the top edge of the resonators tube.

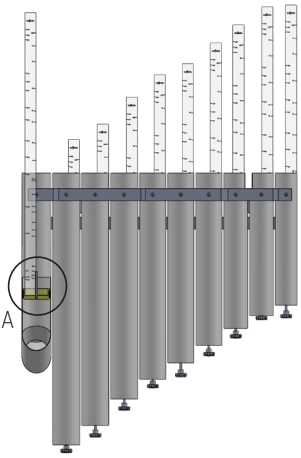

Detail (A)

1. How to use tuning cap
Syringe-inspired tuning system ensures an air-tight seal and allows for quick, easy adjustment to environment.

Simply pull and push the rod of each tunable cap to ideal tonal position.

All tuning caps were processed with lubricant to ensure smoothness. It may wear out through time. We strongly recommend using a silicon based spray lubricant.

Lightly spray on the rubber fins of tuning cap, and wipe clean excess fluid to avoid running or dripping.

* Each tuning cap is intended for the specific resonator in which it is originally inserted. For best results, caps should not be moved to different tubes.





2. How to move the instrument safely
Grasp the keyboard frame bass end piece, push / pull the instrument for safe transportation.



3. Pull the bar cord tight
Make sure to pull the bar cord tight when placing bar sets.
The soft bar cord material works together with our free-floating bar posts, but slack in the cord will impair results.

4. Concert Black marimba requires **no extra tool** to assemble, except for the knobs that come with your instrument. Please do not disassemble any parts with tool besides your hands.

5. If parts or warranty service should be needed, please contact the dealer through which the instrument was purchased. Please be prepared to provide the instrument serial number, which can be found on the badge on **No. 4** folding rail (player side).

majestic

majesticpercussion.com

Ver. 202604
K1PAMX250002

Manual download